FOOTPATH CONSTRUCTION (TO RCD 1100/5 & AS DETAILED BELOW)
- 100mm SINGLE COURSE C28/35 SLAB ON
- 150mm SR21 STONE BLINDED WITH QUARRY SCREENINGS ON
- 250mm 6F1 CAPPING
- JOINTS EVERY 3.0m c/c
- JOINTS FORMED WITH DOUBLE THICKNESS OF BITUMINOUS ROOFING FELT TO I.S. 36 (TYPE 1F)
- ALL CONCRETE EDGES AND JOINTS SHALL BE BULLNOZED WITH A TROWEL
- CONCRETE SHALL BE FINISHED BY FLOATING WITH A WOODEN TROWEL & WHILE STILL GREEN LIGHTLY BRUSHED WITH A BASS BROOM TO PRODUCE A SLIGHT ROUGHNESS
- FOOTPATH TO BE DISHED AT ROAD CROSSING POINTS

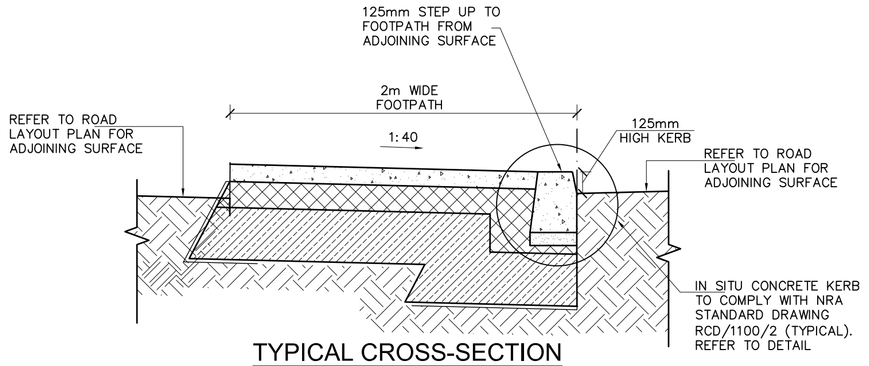

TYPICAL CROSS-SECTION THROUGH PROPOSED FOOTPATH

SCALE 1:25

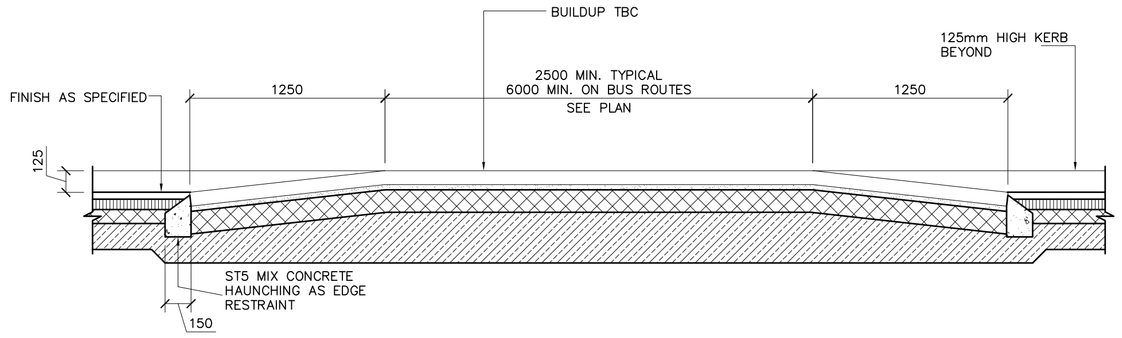

TYPICAL SECTION THROUGH RAISED TABLE

SCALE 1:25

CAR PARKING:

SURFACE COURSE	–	40mm POLYMER MODIFIED STONE MASTIC ASPHALT PMSMA SMA 10 SURF PMB 65/105–60 DES: TO CL 942 ON
BINDER COURSE	–	60mm DBM BINDER COURSE AC 20 DENSE BIN 40/60 REC : TO CL 906 ON
BASE COURSE	–	100mm DBM ROAD BASE AC 32 DENSE BIN 40/60 REC : TO CL 906 ON
SUB–BASE	–	150mm GRANULAR SUB–BASE TO CL 808 WITH BLINDED SURFACE ON
CAPPING	–	300mm CLASS 6F2 CAPPING MATERIAL (3% CBR ASSUMED) – [CBR VALUES TO SUB–GRADE TO BE CONFIRMED ON–SITE]

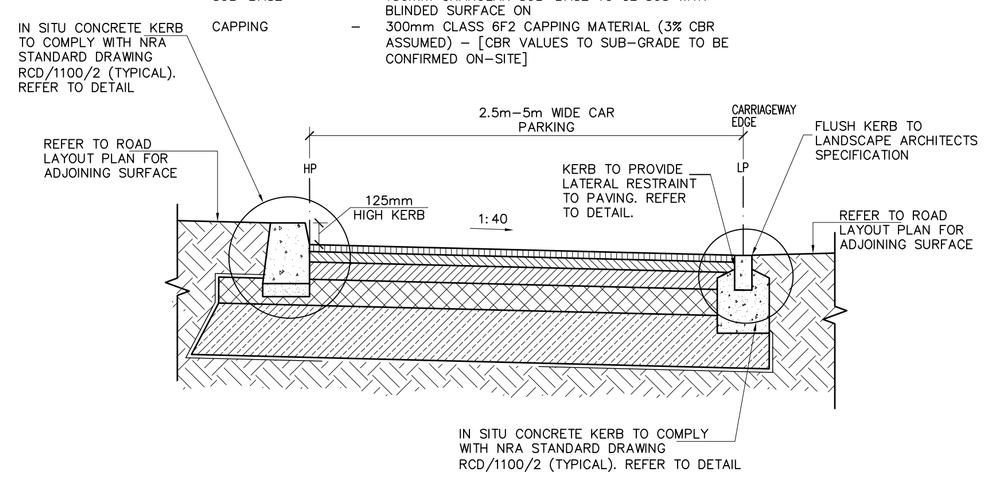

TYPICAL CROSS-SECTION THROUGH PROPOSED CAR PARKING

SCALE 1:25

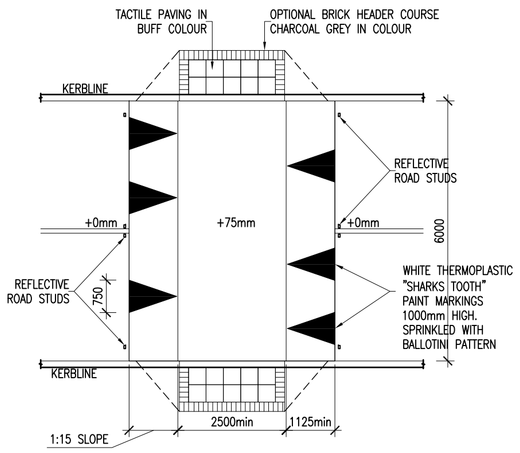

PLAN OF SPEED RAMP

SCALE 1:100

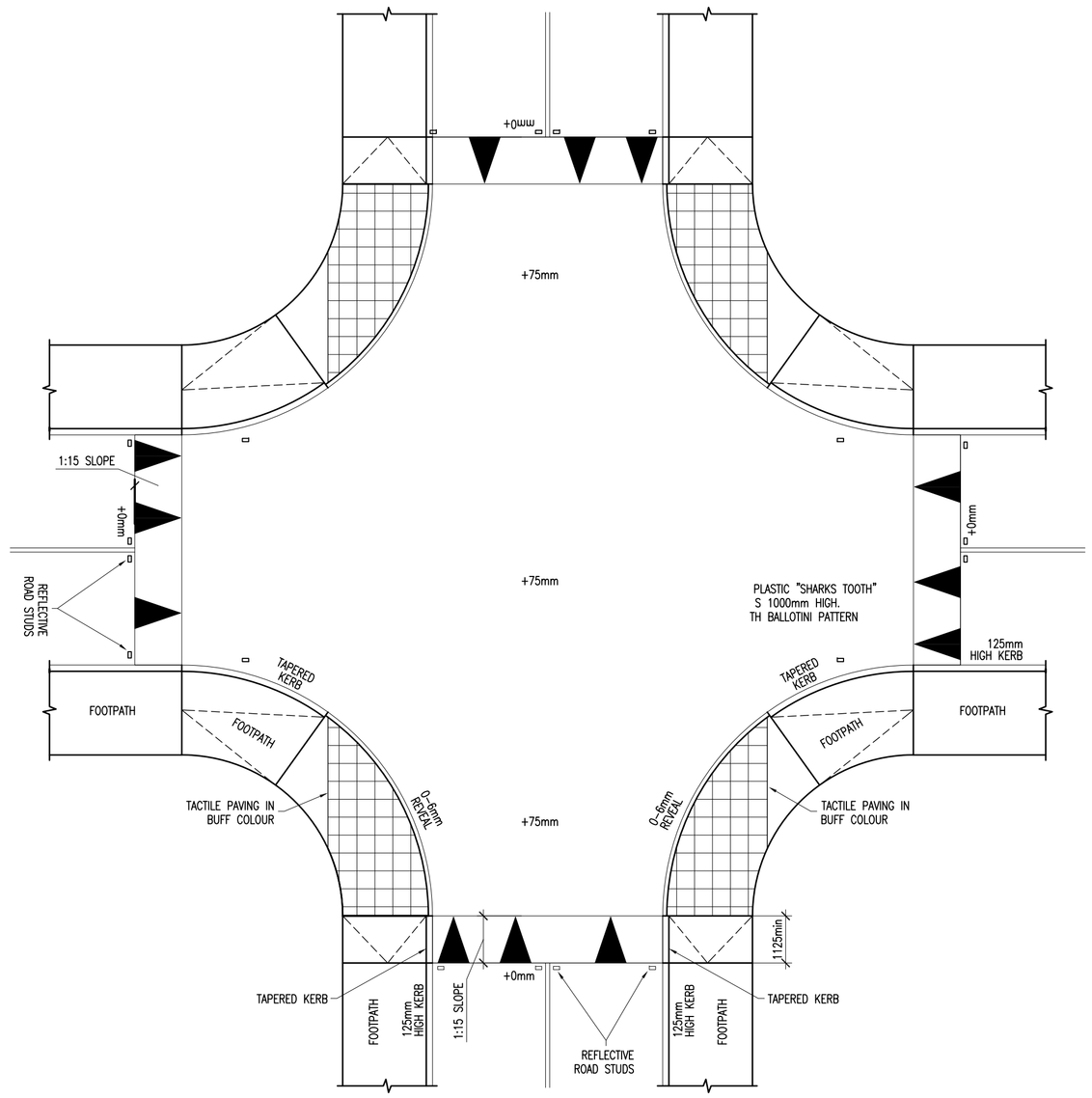

PLAN OF TRAFFIC PLATFORM

SCALE 1:100

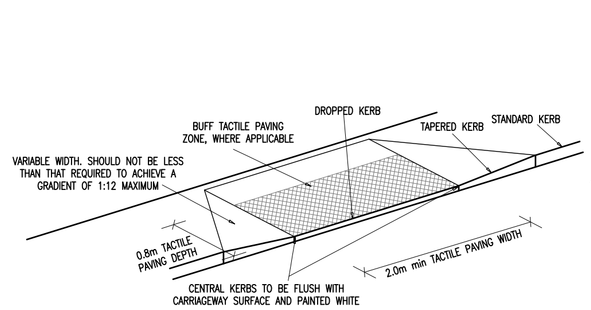

UNCONTROLLED DISHED CROSSING WITH TACTILE PAVING

SCALE 1:50

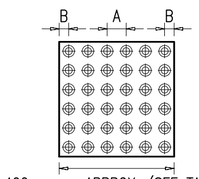

400mm sq APPROX. (SEE TABLE)

PITCH DIMENSIONS	
A	B
66.8mm	33mm

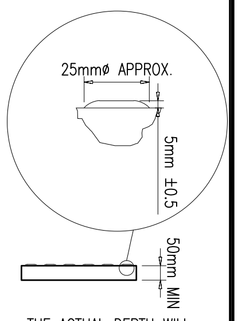

THE ACTUAL DEPTH WILL RELATE TO THE MATERIAL USED TO CONSTRUCT THE MODULE

PROFILE & PLAN

BLISTER SURFACE TACTILE PAVING

N.T.S.

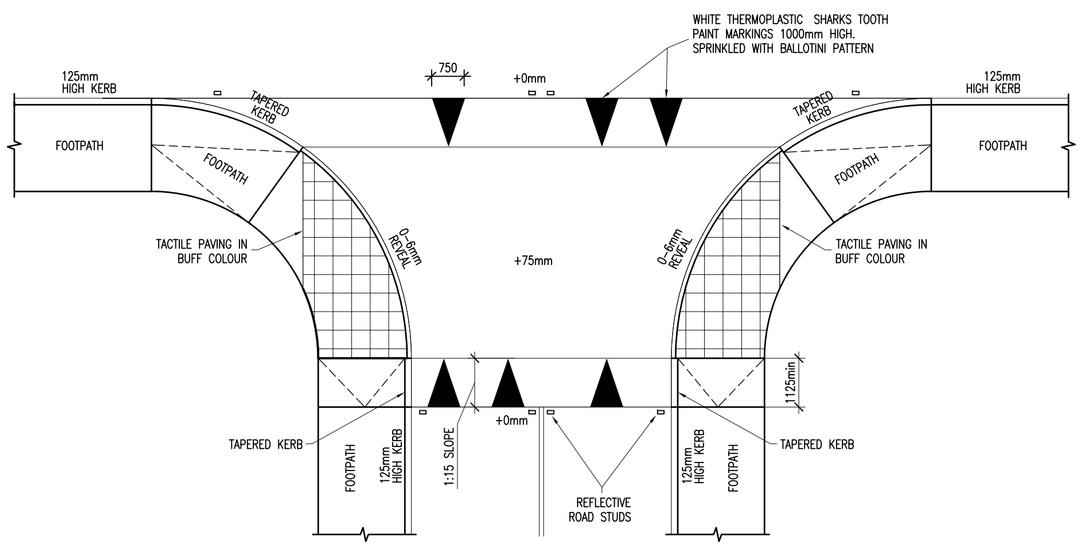

PLAN OF TRAFFIC PLATFORM

SCALE 1:100

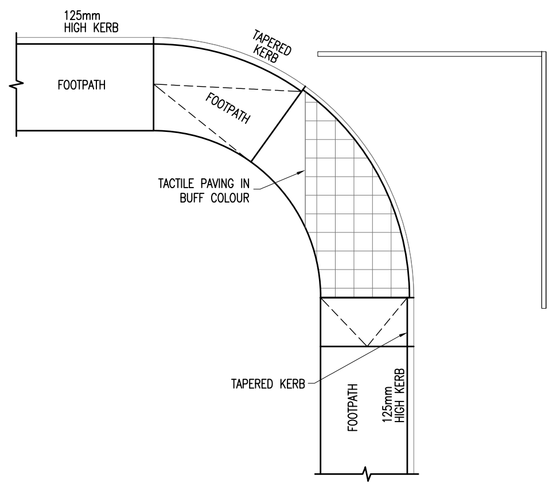

PLAN OF UNCONTROLLED IN-LINE CROSSING

SCALE 1:100

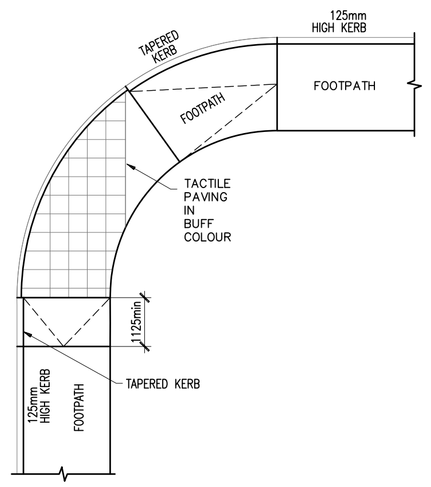

ISSUED FOR PLANNING

DIMENSIONS

Figured dimensions only to be taken from this drawing.
All dimensions to be checked on site.
Architects to be informed immediately of any discrepancies before work proceeds.

© COPYRIGHT

This drawing and any design hereon is copyright of JOR Consulting Engineers and must not be reproduced in whole or in part without their express written consent.

NOTES:

REV	DATE	DETAILS
A	07.12.18	Issued for Planning
1	16.11.18	Draft Issue

jor Joseph O'Reilly
Consulting Civil & Structural Engineers
Tel: 046 9077032 Fax: 046 9077932
Email: mail@jor.ie Web: www.jor.ie
Unit 1, St. Therese's Place, Flowerhill, Navan, Co. Meath

CLIENT: Rocture 1 Ltd

TITLE: Road Construction Details Sheet 2 of 2

PROJECT: Dunshaughlin East SHD

SCALE	DATE	DRAWN BY:	CHECKED BY:
As Shown @ A1	Nov 2018	PC	MS

JOB No.	DRAWING No.	REV
J18-001	036	A